Product Specifications

RAMM
FENCE & STALLS

Thank you for choosing PVC Fence from RAMM.
This guide will help make your installation easy.
If you have any questions, please call 800-434-8456.

All dimensions are in inches (“)

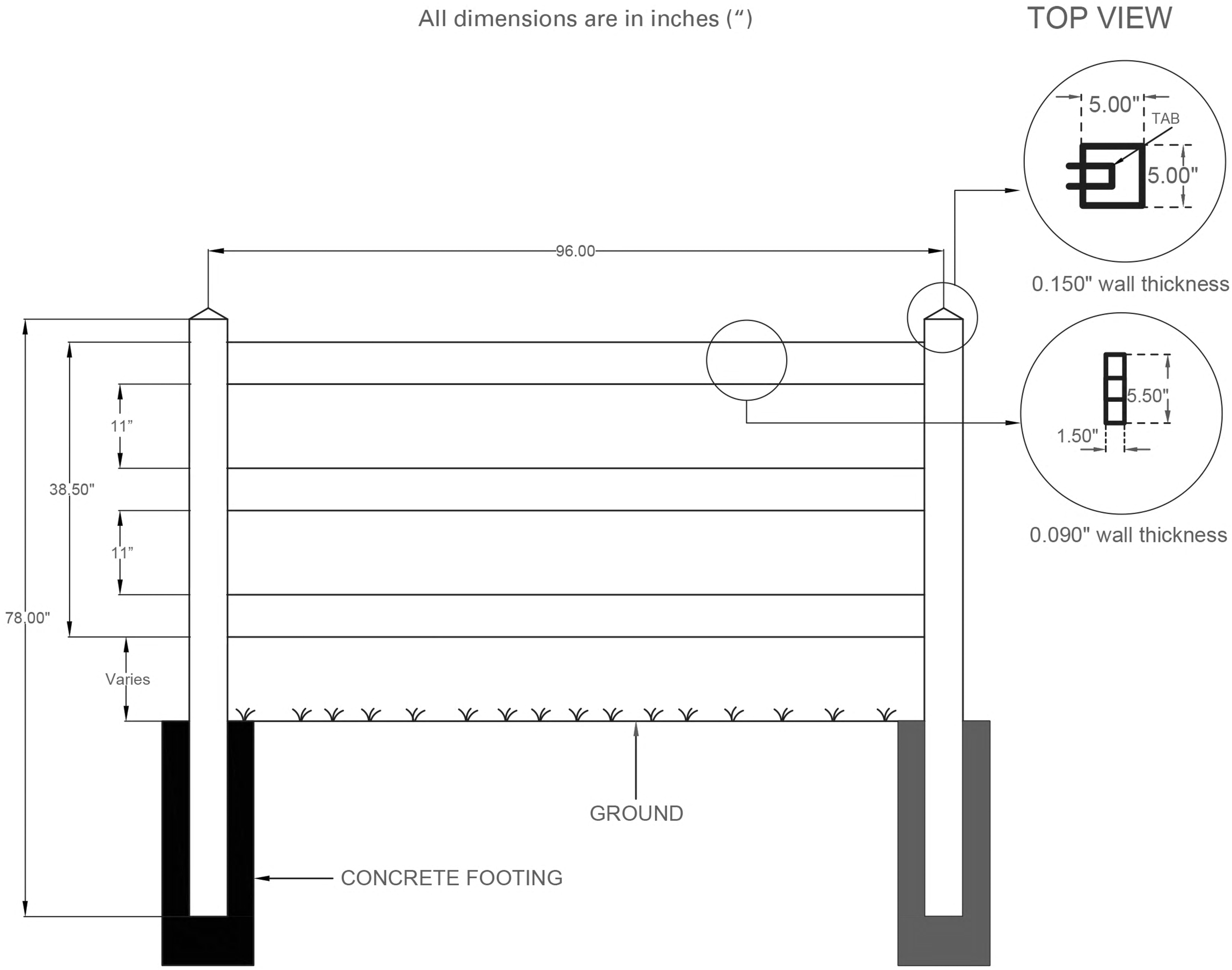

*Check local code before installing.

Please note, this fence can be trimmed down in width to accommodate custom applications.

RAMM FENCE & STALLS

Important Reminders:

- We recommend installing 1 post and section at a time but other methods work too. Alter this method to suit your installation needs.
- Prior to construction, check with your regulatory agency for special code requirements in your area.
- Contact your utility supplier to locate and mark underground lines before excavation.
- Sketch out the layout of your fence and calculate the number of panels, gates and posts required (to finish a fence run, one extra post kit is needed).
- Careful planning and measuring of your fence is essential. Keep in mind that moving posts after the concrete sets is extremely difficult.

! Fast2K Tip! Wherever concrete is used in installation, use Fast2K instead to simplify the process. Fast2K is a concrete alternative that is much easier to use and set.

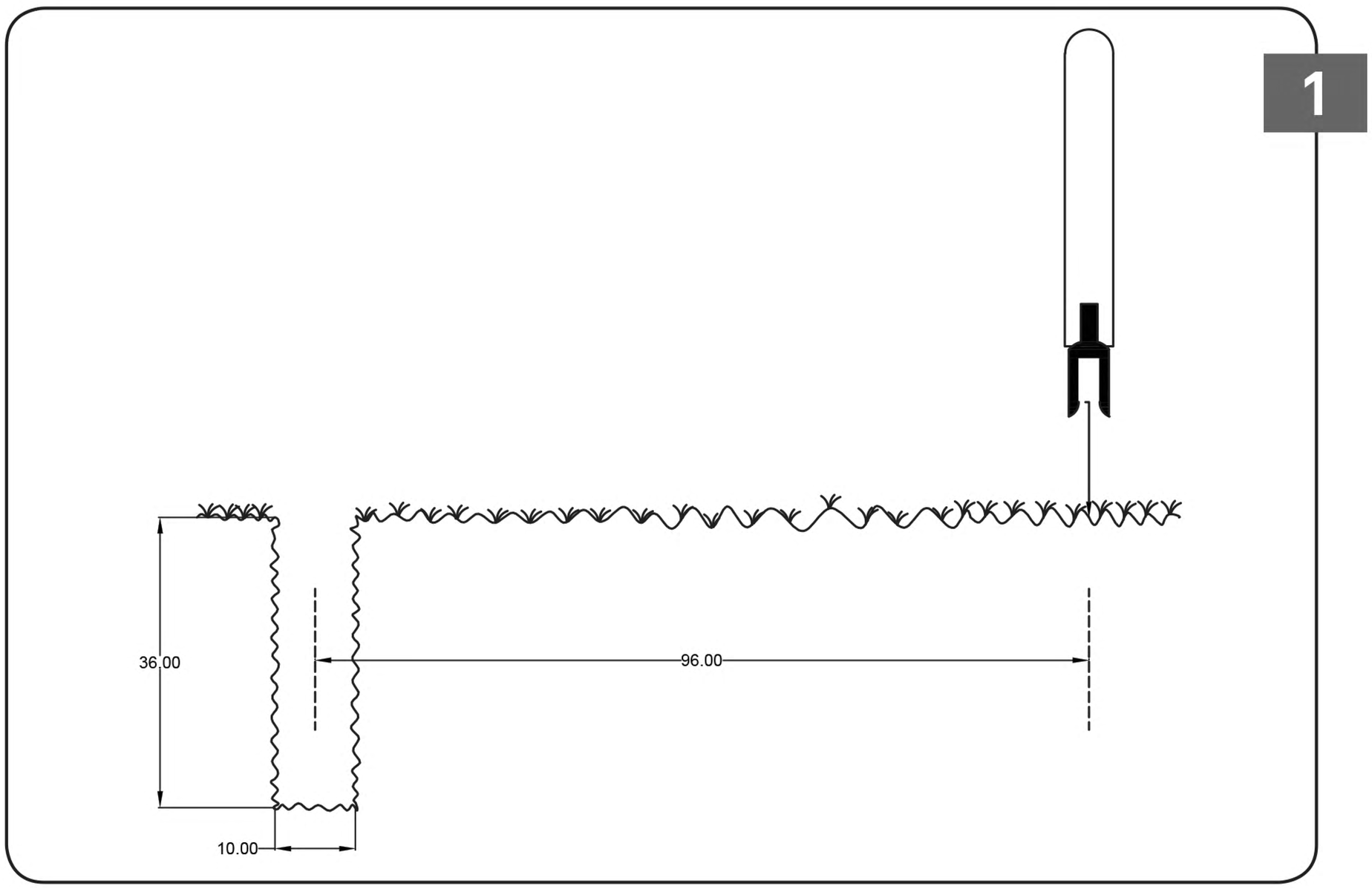

1. String your fence line and begin by digging your first post hole: 10″-12″ wide x 32″-36″ deep.

   ! Fast2K Tip! For installation using Fast2K, dig the hole 8" wide x 32" deep.

2. Dig your second hole 96″ on center to your first hole, your third hole 96″ on center to your second hole, and so on. Be sure to dig only 3-4 holes at a time to ensure proper spacing.

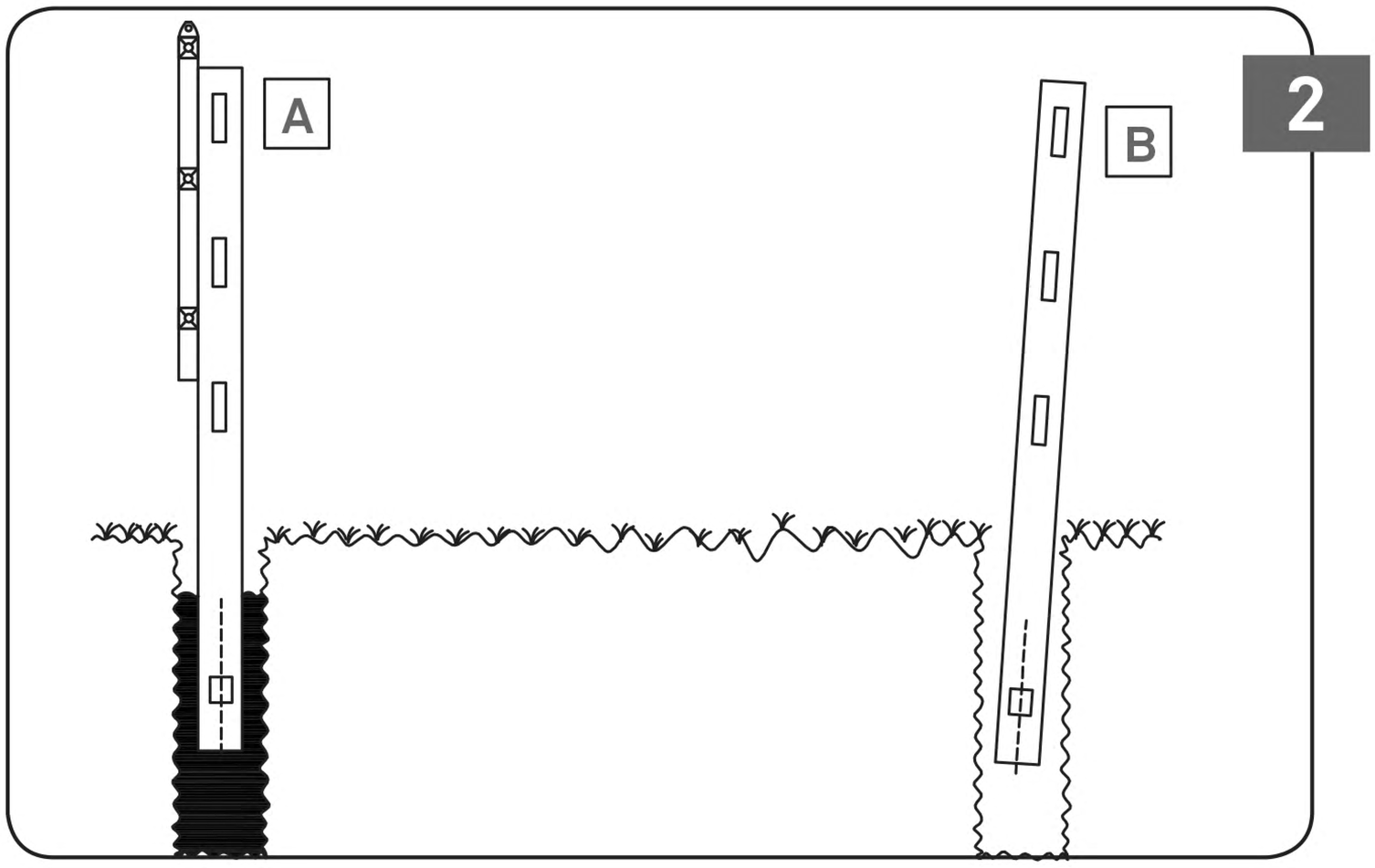

1. Insert post A into hole and set concrete. Post B may be loosely laying in hole until panel is fully installed. Repeat process down the line.

   ! Fast2K Tip! Add one 26oz. bag to the hole. Hold post in place to prevent movement and follow mixing instructions on the bag. Pour around post and plumb during expansion.

2. To set posts in concrete, hold post in place and prevent movement to ensure the post stays straight. Be prepared to use a minimum of (1) 60lb. bag of concrete for each post hole.
3. Mix concrete and pour wet.
4. Pour concrete in hole and plumb. Fill any remaining space with soil. Lastly, verify the spacing between the ground and the bottom rail is correct (up to 11”).

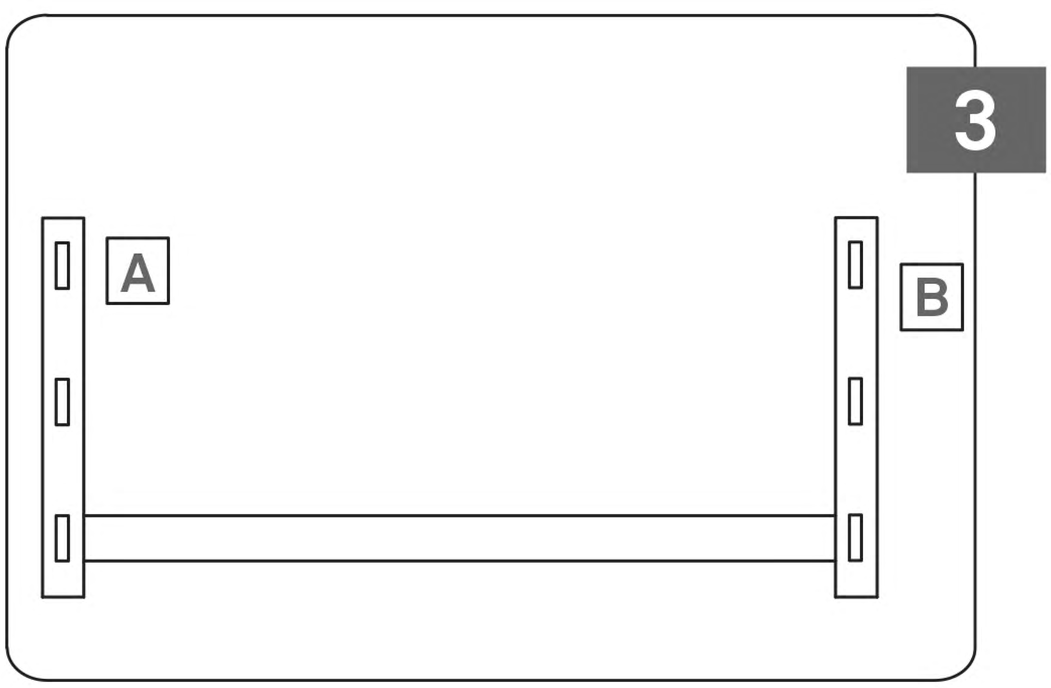

1. Insert rails into post A and then into post B.

RAMM FENCE & STALLS

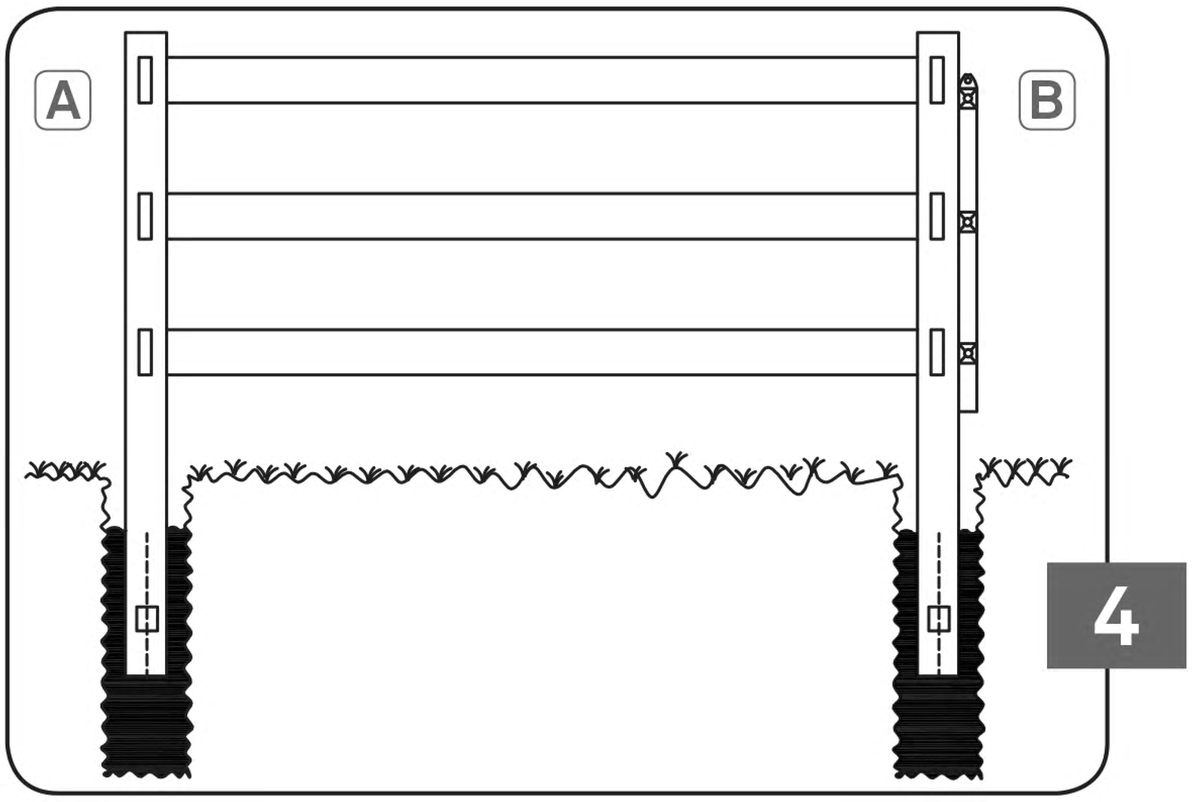

1. Straighten and level post B.
2. Pour in mixed concrete.
3. Insert post hole covers into unused holes of first post. Repeat steps down the line.

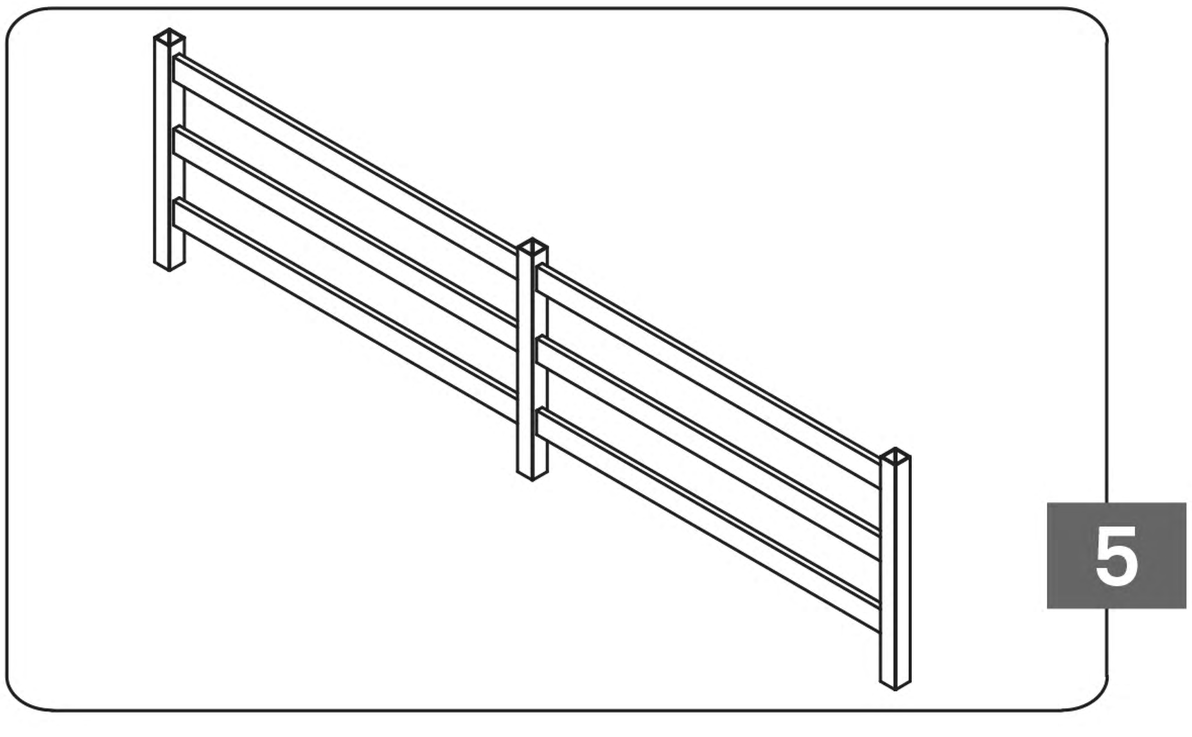

This fence panel can rack up to 6” over an 8 ft. span. If more material is needed, please call **800-434-8456**.